lumbergautomation
A BELDEN BRAND

Product: RST 4-RKWT/LED W 4-225

Sensor/Actuator Double-Ended Cordset: Male straight A-coded translucent 4-pin M12 Standard connector to female angled A-coded translucent 4-pin M12 Standard connector with 3xLEDs (PNP), 10-30 V DC, 4 A; PUR black cable, 4-wires, 0.34 mm²

Product Description

Sensor/Actuator Double-Ended Cordset: Male straight A-coded translucent 4-pin M12 Standard connector to female angled A-coded translucent 4-pin M12 Standard connector with 3xLEDs (PNP), 10-30 V DC, 4 A; PUR black cable, 4-wires, 0.34 mm²

Technical Drawing

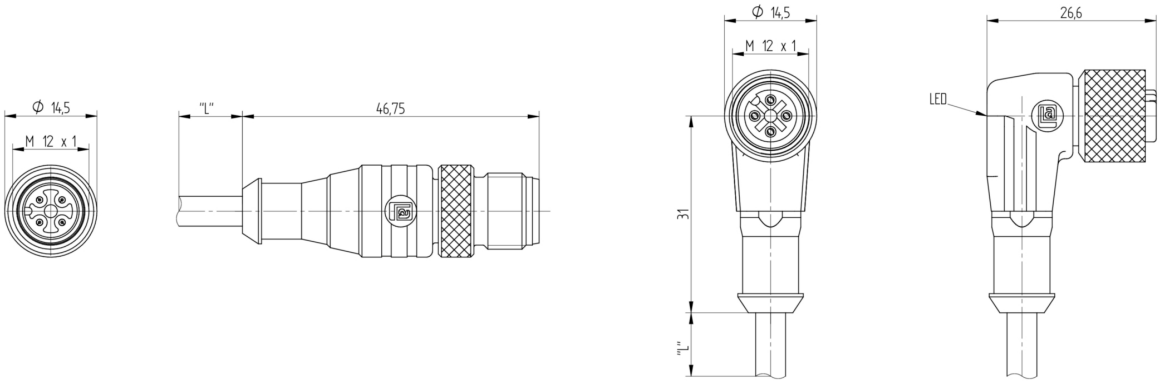

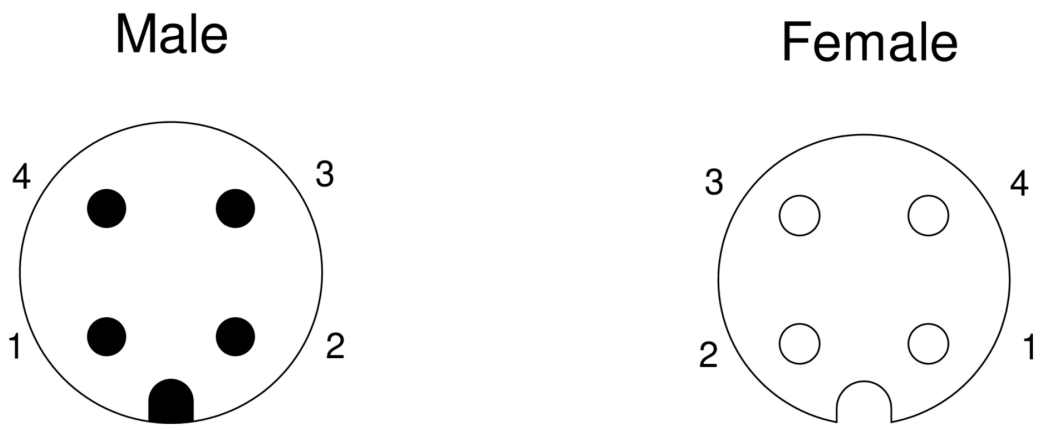

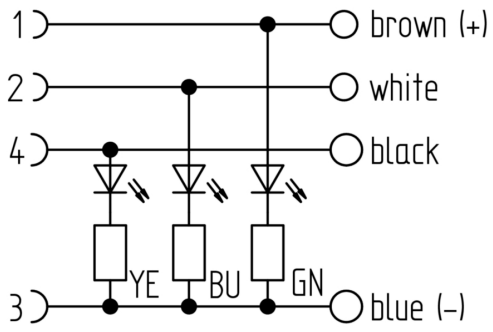

Technical Specifications

Face View Side 1

Pin 1	Pin 2	Pin 3	Pin 4
brown	white	blue	black

Face View Side 2

Pin 1	Pin 2	Pin 3	Pin 4
brown	white	blue	black

Product Description

Product Family:	Sensor / Actuator Connectors
Brand:	Lumberg Automation
Connector Type:	Cordset, double ended
Shielding:	Unshielded
Rated Voltage:	30 V
Rated Voltage (UL):	10-30 V DC
Rated Impulse Voltage:	0.8 kV
Operating Voltage:	10-30 V DC
Rated Current*:	4 A
Rated Current (UL)*:	4 A

Technical Data Side 1

Product Sub Family:	M12 Standard
Type of Contact / Gender:	Male
Connector Design:	Straight
Attachment Type:	Coupling Screw
Number of Pins:	4
Coding:	A
Contact Resistance:	≤ 10 mOhm
Insulation Resistance:	> 10^9 Ohm
Mating Cycles:	≤ 100
Ambient Temperature (Operation)*:	- 40 °C - + 90 °C
Operating Temperature (UL):	max. + 50 °C
Protection Degree / IP Rating**:	IP65, IP67, IP68 (1 m / 24 h), IP69K
Design Standard:	IEC 61076-2-101
Pollution Degree:	3 acc. to DIN EN 60664-1 (VDE 0110-1)
Overvoltage Category:	III acc. to DIN EN 60664-1 (VDE 0110-1)
Contact Base Material:	CuSn
Contact Plating:	Cu/Au
Contact Bearer Material:	TPU
Contact Bearer Color:	Orange
Flammability Class (Contact Bearer):	UL 94 HB

Molded Body Material:	TPU
Molded Body Color:	Translucent
Flammability Class (Molded Body):	UL 94 HB
Attachment Material:	CuZn
Attachment Plating:	Nickel-plated
Fastening Torque (Attachment):	M 12x1: (50-60) Ncm, hand-tight
Note:	Do not connect or disconnect under load.

Cable Data

Cable Number:	225
Conductor Size:	0.34 mm²
Number of Wires:	4
Minimal Bending Radius (Fixed Inst):	> 5 x D
Minimal Bending Radius (Flexible Inst):	> 10 x D
Cycles (Bending):	> 5 M
Cycles (Torsion):	> 5 M @ ± 360 °/1 m
Conductor material:	Cu
Cable Jacket Material:	PUR
Cable Jacket Color:	black matt similarly RAL 9005
Cable Diameter D:	ø 4.70 ± 0.15 mm
Wire Insulation Material:	PP
Insulated Wire Diameter:	ø 1.30 ± 0.10 mm
Ambient Temperature (Fixed Installation):	- 50 °C - + 90 °C (UL: + 80 °C)
Ambient Temperature (Flex Installation):	- 25 °C - + 90 °C (UL: + 80 °C)
Ambient Temperature (Drag Chain Inst):	- 25 °C - + 60 °C
UL Cable Type:	AWM: 20549
Flammability Class (Cable Jacket):	DIN EN 60332-2-2, VDE 0482-332-2-2, IEC 60332-2-2, CSA FT-2
Cable Characteristics:	Good microbes and hydrolysis resistance; Mainly plasticizer diffusion free; Exclusion of PVC and silicone; Coldness flexibilty; Free of lacquer wetting disturbing substances

Technical Data Side 2

Product Sub Family, Side 2:	M12 Standard
Type of Contact / Gender, Side 2:	Female
Connector Design, Side 2:	Angled
Attachment Type, Side 2:	Coupling Nut
Number of Pins, Side 2:	4
Coding, Side 2:	A
Contact Resistance, Side 2:	≤ 10 mOhm
Insulation Resistance, Side 2:	> 10^9 Ohm
Mating Cycles, Side 2:	≤ 100
Ambient Temperature (Operation), Side 2*:	- 40 °C - + 90 °C
Operating Temperature (UL), Side 2:	max. + 50 °C
Protection Degree / IP Rating, Side 2**:	IP65, IP67, IP68 (1 m / 24 h), IP69K
Design Standard, Side 2:	IEC 61076-2-101
Pollution Degree, Side 2:	3 acc. to DIN EN 60664-1 (VDE 0110-1)
Overvoltage Category, Side 2:	III acc. to DIN EN 60664-1 (VDE 0110-1)
Contact Base Material, Side 2:	CuSn
Contact Plating, Side 2:	Cu/Au
Contact Bearer Material, Side 2:	TPU
Contact Bearer Color, Side 2:	Orange
Flammability Class (Contact Bearer), Side 2:	UL 94 HB
Molded Body Material, Side 2:	TPU
Molded Body Color, Side 2:	Translucent
Flammability Class (Molded Body), Side 2:	UL 94 HB
Attachment Material, Side 2:	CuZn
Attachment Plating, Side 2:	Nickel-plated
O-Ring Material, Side 2:	FKM, green

Function Indicator, Side 2:	3xLEDs (PNP)
Fastening Torque (Attachment), Side 2:	M 12x1: (50-60) Ncm, hand-tight

Approvals

UL-File:	E315587
UL:	UL 2238; cURus

Safety & Environmental Compliance

RoHS Compliant:	yes

Resistances

Halogenfree:	DIN EN 50267-2-1, IEC 60754-1, VDE 0482-267-2-1

Notes

Note Derating:	Notice derating
Protection Degree / IP Rating Note:	** only if mounted and locked in combination with Hirschmann / Lumberg Automation connector.

Variants

Item #	Item Description	Cable Length
4726	RST 4-RKWT/LED W 4-225/1 M	1 m
4729	RST 4-RKWT/LED W 4-225/3 M	3 m
4730	RST 4-RKWT/LED W 4-225/5 M	5 m
15375	RST 4-RKWT/LED W 4-225/10 M	10 m

© 2020 Belden, Inc

All Rights Reserved.

Although Belden makes every reasonable effort to ensure their accuracy at the time of this publication, information and specifications described here in are subject to error or omission and to change without notice, and the listing of such information and specifications does not ensure product availability.

Belden provides the information and specifications herein on an "ASIS" basis, with no representations or warranties, whether express, statutory or implied. In no event will Belden be liable for any damages (including consequential, indirect, incidental, special, punitive, or exemplary damages) whatsoever, even if Belden has been advised of the possibility of such damages, whether in an action under contract, negligence or any other theory, arising out of or in connection with the use, or inability to use, the information or specifications described herein.

All sales of Belden products are subject to Belden's standard terms and conditions of sale.

Belden believes this product to be in compliance with all applicable environmental programs as listed in the data sheet. The information provided is correct to the best of Belden's knowledge, information and belief at the date of its publication. This information is designed only as a general guide for the safe handling, storage, and any other operation of the product itself or the one that it becomes a part of. The Product Disclosure is not to be considered a warranty or quality specification. Regulatory information is for guidance purposes only. Product users are responsible for determining the applicability of legislation and regulations based on their individual usage of the product.