Mechanical Cam Switches

BNS 816-B03-KHH-12-610-11
Order Code: BNS04PW

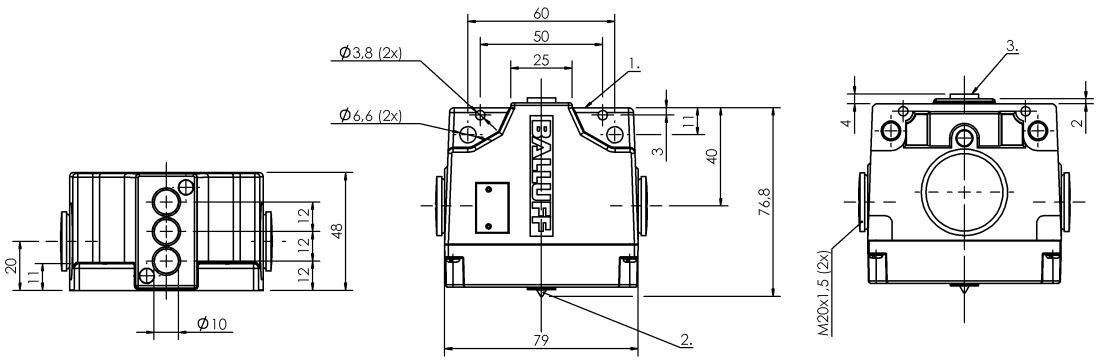

1) Reference edge, 2) Function indicator FD/FE/LL, 3) Sensing surface

Display/Operation

Function indicator	1-3. Switch position: Optical fiber

Electrical connection

Connection type	1-3. Switch position: Screw terminal
Electrical version	2-wire

Electrical data

Continuous current	1-3. Switch position: 0.1 A
Rated operating voltage Ue	1-3. Switch position: 24 V DC

Environmental conditions

Ambient temperature	-25...70 °C
IP rating	IP67

General data

Approval/Conformity	CE WEEE
Basic standard	IEC 60947-5-2
Operating principle	1-3. Switch position: Inductive
Version	Inductive

Material

Housing material	Aluminum
Housing material, surface protection	Anodized

Mechanical data

Distance cam - active surface	1-3. Switch position: 0…1.62 mm
Flange, feed-through	None
Installation	Vertical
Switching element	1-3. Switch position: BES 517-561-H

Range/Distance

Assured operating distance Sa	1-3. Switch position: 1.6 mm
Range	2 mm
Rated operating distance Sn	1-3. Switch position: 2.0 mm
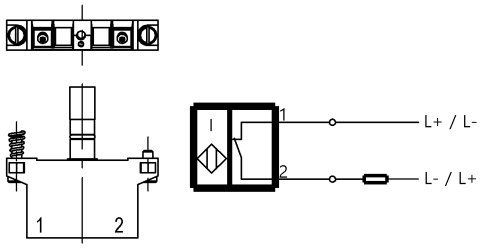
Wiring Diagrams