QFX-QSFP-DACBO-5M-LEG
JUNIPER NETWORKS 40GBASE-CU QSFP+
5M DAC PASSIVE

QFX-QSFP-DACBO-5M-LEG
40Gbase QSFP+ DAC

Features

- Full duplex 4 channel parallel passive optical cable
- Transmission data rate up to 10.3Gbit/s per channel
- SFF-8436 QSFP+ compliant
- Hot pluggable electrical interface
- Low power consumption
- Housing isolated from connector ground
- Operating case temperature 0°C to +70°C
- 3.3V power supply voltage
- RoHS 6 complain

Product Description

Legrand passive copper cables designed with high performance, low power consumption, long reach interconnect solution supporting 40G Ethernet, fiber channel and NIC cards. It is compliant with the QSFP MSA and IEEE P802.3ba.

Passive copper cable is an assembly of 4full-duplex lanes, where each lane is capable of transmitting data at rates up to 10Gb/s, providing an aggregated rate of 40Gb/s.

Specifications

Parameter		Unit
Min. Dielectric Withstand Voltage	300	VDC
Insulation Resistance	1000	Mohms
Current Rating	0.5 Amp Min/Signal Contact	
Operating Temperature	0 to 70	°C
Flammability Rating (Plastics)	UL 94	
Shield	Braid/Foil	
Connector		
Backshell Material	Nickel Plated Zinc Diecast	
Contact Material	PCB with Gold-Plated Pads	
Max. Insertion Force	40	N
Max. Withdrawl Force	30	N
Durability	250	Cycles
Tightest Recommended Vertical Spacing (Belly to Belly)	11.80	mm
Tightest Recommended Vertical Spacing (Stacked)	17.50	mm
Cable		
Conductor	Solid	
Wire Gauge	30 to 24	AWG
Impedence	100±5	ohms
Construction	Twinaxial	
Jacket Type	PVC	

Mechanical Specifications

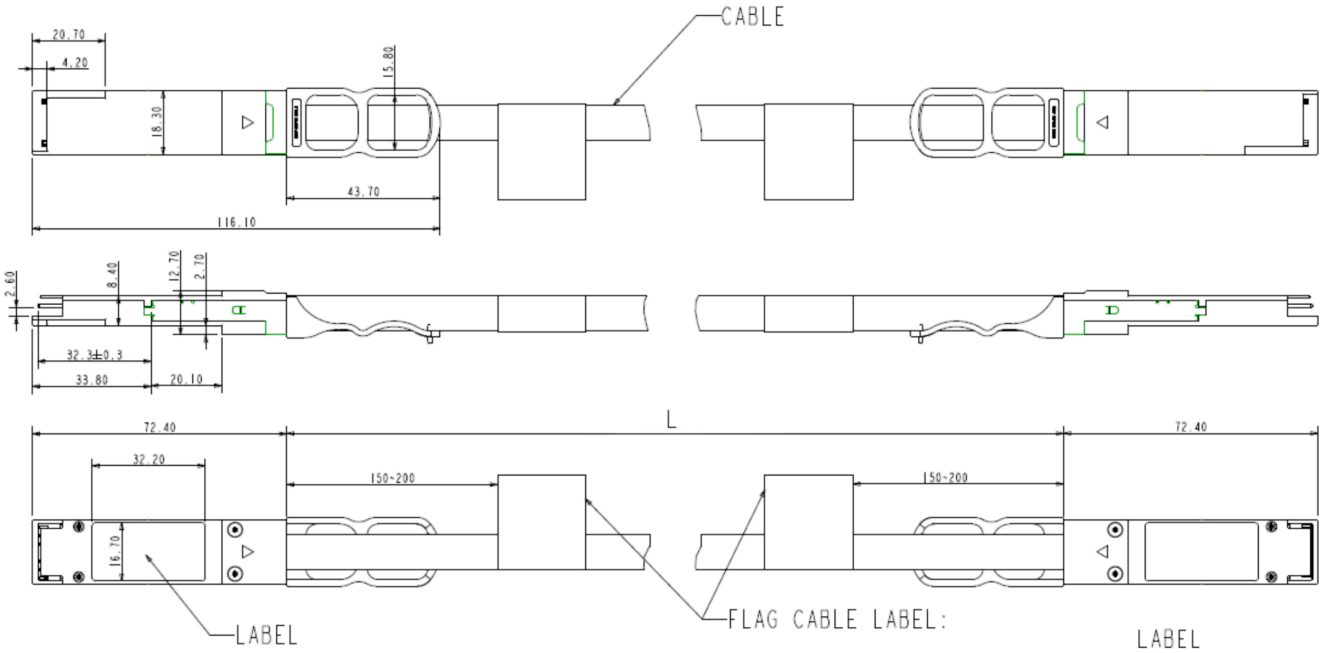

Data Communications

125 Eugene O'Neill Drive
New London, CT 06320
800.934.5432
www.legrand.us

570 Applewood Crescent
Vaughan, Ontario L4K 4B4
905.738.9195
www.legrand.ca