Mechanical Cam Switches

BNS 823-D04-K12-100-22-04-FC
Order Code: BNS04HE

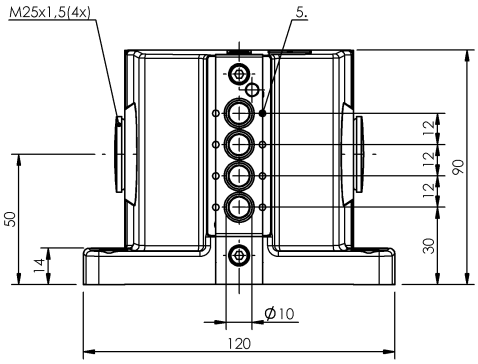

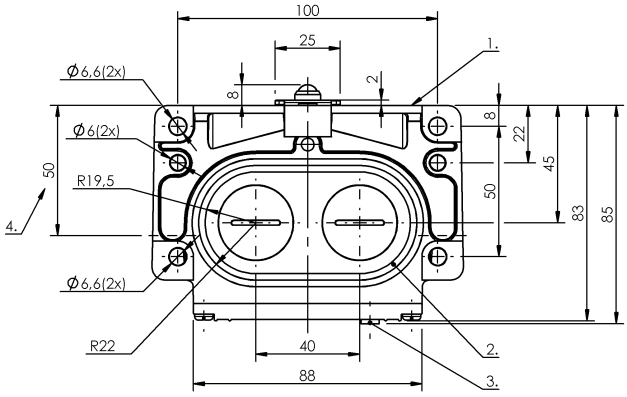

1) Reference edge, 2) Sealing ring, 3) Function indicator FC, 4) Cable passage, 5) Mark. Safety switch position

Display/Operation

Function indicator	1-4. Switch position: FC - 6…24 V

Electrical connection

Connection type	1-4. Switch position: Screw terminal

Electrical data

Continuous current	1-4. Switch position: 6 A
Rated operating voltage Ue	1-4. Switch position: 250 V AC
Switching function mechanical	One NO and one NC galvanically isolated Normally open with snap funct. Double-interrupting NC forced-opening per VDE Dual changeover
Switching rate	1-4. Switch position: 160/min

Environmental conditions

Ambient temperature	-5...85 °C
IP rating	IP67

Functional safety

B10d (EN ISO 13849-1)	BSE 85: 1 mil. Switching operations

General data

Approval/Conformity	CE WEEE
Basic standard	IEC 60947-5-1
DIN switch	DIN 43697
Operating principle	1-4. Switch position: Mechanical
Version	Safety EN 60204-1

Material

Housing material	Aluminum
Housing material, surface protection	Anodized
Material contacts	1-4. Switch position: Silver
Plunger material	1-4. Switch position: Stainless steel (1.4034)

Mechanical data

Approach direction	longitudinal, parallel to attachment surface
Approach speed	1-4. Switch position: 10 m/min
Distance cam - reference edge	1-4. Switch position: 4.50...5.00 mm
Flange, feed-through	2 threaded exit M25
Installation	Vertical
Life expectancy mechanical	1-4. Switch position: 1 million Switching operations
Number of switching positions	4x Ball
Plunger style	1-4th switch position: Ball
Switch actuation force	1-4. Switch position: 30 N
Switching element	1-4. Switch position: BSE 85

Range/Distance

Reproducibility	1-4. Switch position: ±0.02 mm

Wiring Diagrams
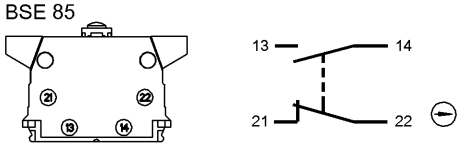
BSE 85