BTM family

HMI colour touch panel

Benefits

- **High-performing** device with a powerful CPU for a wide range of applications in building automation and energy monitoring.
- **High definition TFT widescreen (16:9)** color touch panel with dimmable LED backlight available in three different sizes.
- **Fully programmable** by the dedicated IDE software with a vast library of widgets, functions and communication protocols.
- **Connectable to UWP 3.0 and to third-party field devices** via BACnet IP, BACnet MS/TP or Modbus TCP/IP, Modbus RTU and KNX IP.
- **Interoperability**: IIoT data distribution via MQTT and OPC UA.
- **Reliability**: Industrial grade hardware powered by Linux OS.

Description

BTM panels are completely configurable HMI touch devices available in three models, 7”, 10” and 15.6”.

The 7” and 10” models have a resistive touchscreen, the 15” has a capacitive unit.

They can be configured by means of the dedicated BTM-PC-IDE software that offers a wide range of widgets and communication protocols to develop projects that meet all the user requirements in several applications.

BTM panels come with Ethernet, serial and USB ports that match a wide range of use cases.

They are fully integrated into the UWP 3.0 ecosystem which includes a complete range of meters, sensors and actuators.

Applications

Monitoring and active control for building automation

The BTM panel can be connected to the UWP 3.0 controller via Modbus TCP/IP, RTU or via BACnet IP to manage and control, as a powerful HMI interface, all the building automation functions (i.e. lighting control, HVAC regulation, fire dampers, alarms handling and others). The parameters of the functions can be imported easily to the IDE software from the Modbus map or the BACnet EDE files generated from the UWP 3.0 Tool. This way, user can link those functions to the widgets available in the Widgets Gallery.

The BTM panel can also be connected to third-party devices, by using the available communication protocols, the connection to SCADA or the BMS systems.

Data logging and data automation with local display for grouping meters data into a switchgear or a machine

The BTM panel can be installed in a cabinet and connected to energy meters or analyzers to read the variables and the alarm events about electric, water or gas consumptions. Such data can be analyzed, aggregated, or displayed in trends, bar graphs or digital dashboards on the BTM screens, according to the user's requirements. The measurement data collected and stored can be saved, exported or exchanged with other systems via FTP, SMTP or by using the available protocols.

Local and remote custom dashboards

The integrated web server allows users to access HMI and web HMI projects via standard web browsers or mobile devices such as tablets or smart-phones. Users can create HTML5-based web projects to show the graphical pages displayed locally on the BTM screen so to provide remote access to the system.

Main functions

- Local HMI and remote Web-HMI for custom dashboards
- Data logger and gateway for creating data automation solutions
- IIoT Edge device for interfacing the field and the Cloud via secure protocols and OPC UA or MQTT standards

Main features

Protocols and communication

- Connectible to the UWP 3.0 controller via Modbus TCP/IP, Modbus RTU and BACnet IP
- Connectible to third-party devices via Modbus TCP/IP, Modbus RTU, BACnet IP, BACnet MS/TP, KNX IP and KNX TP*
- Up to 32 Modbus devices connectible to the RS485 port
- Remote monitoring and control with MAIA Cloud**
- OPC UA server / client for Industry 4.0 applications to exchange data among HMI, PLC and equipments.
- MQTT service for IIoT messaging compatible with any MQTT broker, including those offered by providers such as Amazon, Microsoft, IBM, Microsoft.

**through an expansion optional module for BTM-T15-PLUS*
***MAIA Cloud will be available from 2022*

Web capabilities

- Integrated web HMI with HTML5 and Javascript support
- Custom web interface with user's permission management

Features

General

Model	BTM-T7-RSE	BTM-T10-RSE	BTM-T15-PLUS
Material	Plastic		Aluminum
Dimensions (HxWxD)	See fig. 1		See fig. 2
Weight	0.6 Kg	1.0 Kg	4.1 Kg
Colour	Black	Black	Grey (back) Black (front)
Protection degree	IP66 (front), IP20 (back)		

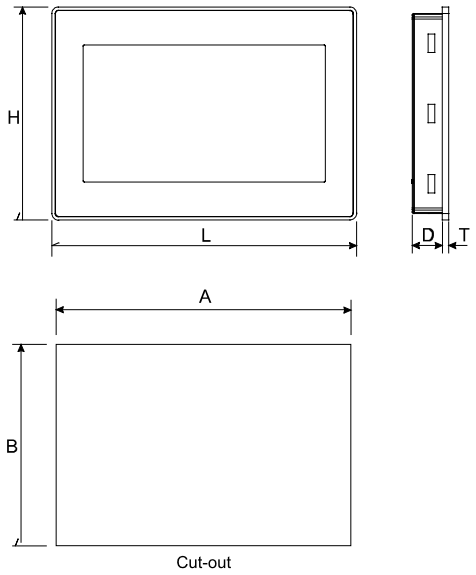

Fig. 1 *Dimensions BTM-Txx-RSE*

Model	L	H	D	A	B	T
BTM-T7-RSE	187 mm / 7.36”	147 mm / 5.79”	29 mm / 1.14”	176 mm / 6.90”	136 mm / 5.35”	5 mm / 0.19”
BTM-T10-RSE	282 mm / 11.10”	197 mm / 7.75”	29 mm / 1.14”	271 mm / 10.66”	186 mm / 7.32”	6 mm / 0.23”

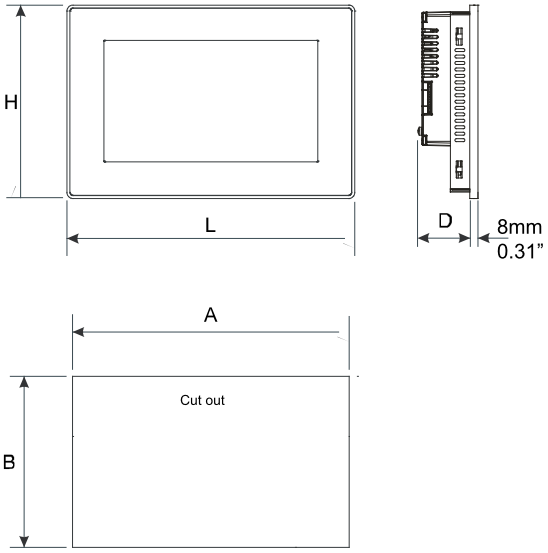

Fig. 2 *Dimensions BTM-T15-PLUS*

Model	L	H	D	A	B
BTM-T15-PLUS	422 mm / 16.60”	267 mm / 10.50”	56 mm / 02.20”	411 mm / 16.18”	256 mm / 10.00”

BTM-Txx-RSE structure

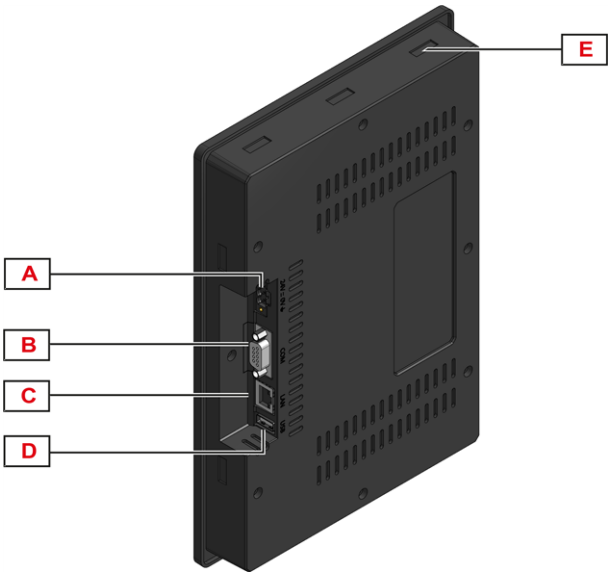

Fig. 3 *Structure*

Area	Description
A	Power supply
B	Serial port
C	Ethernet port 0 (10/100 Mb)
D	USB port
E	Holes for fixing brackets: 4x BTM-T7-RSE / 11x BTM-T10-RSE *Note: the fixing brackets are included*

BTM-T15-RSE structure

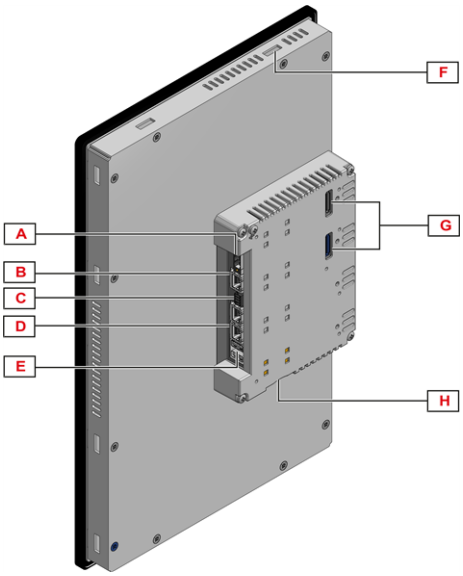

Fig. 4 *Structure*

Area	Description
A	Power supply
B	Ethernet port 0 (10/100 Mb)
C	Serial port
D	Ethernet port 1 and 2 (10/100 Mb)
E	USB port 1 and 2
F	Holes for fixing brackets: 4x BTM-T7-RSE / 11x BTM-T10-RSE *Note: the fixing brackets are included*
G	Expansion slots for plug-in module (I/O module)
H	SD Card slot

Environmental specifications

Model	**BTM-T7-RSE**	**BTM-T10-RSE**	**BTM-T15-PLUS**
Operating temperature	0° to 50°C		-20°C to +60°C
Storage temperature	-20°C to +70°C		
Humidity	from 5 to 85% R.H. non-condensing		

Compatibility and conformity

Model	BTM-T7-RSE	BTM-T15-PLUS
CE	Emission EN 61000-6-3 for installation in residential environments EN 61000-6-2 for installation in industrial environments	
c UL us LISTED	cULus: UL508 cULus: Class 1 Div 2	cULus: UL61010-1 / UL61010-2-201 cULus: Class 1 Div 2

Power supply

Model	BTM-T7-RSE	BTM-T10-RSE	BTM-T15-PLUS
Power supply	24 V dc: 10-32 V dc		
Max. current consumption to 24 V dc	0.3 A	0.38 A	1.2 A
	Note: Make sure the power supply has enough power capacity for the device to work.		
Input protection	Automatic		Electronic
RTC backup	Yes (super capacitor)		1 metal lithium battery (3V 50 mAh), rechargeable, not replaceable by the user, model VL2330; 0.03g.
Battery recharge			At the first installation, the battery must be charged for 48 hours. When the battery is fully charged, it guarantees a 3-month period of data backup at 25° C

Note: the BTM-T15-PLUS model contains 1 metal lithium battery. For the sending, you must comply with the relevant packaging and labelling regulations.

System resources

Model	BTM-T7-RSE	BTM-T10-RSE	BTM-T15-PLUS
Display - colour	7” TFT 16:9 - 64 K	10.1” TFT 16:9 - 64 K	15.6” TFT LED - 16 M
Resolution	800 x 480, WVGA	1024 x 600, WVGA	1366 x 768, HD
Brightness	200 Cd/m2 typ.		400 Cd/m2 typ.
Dimming	Yes		to 0%
Touchscreen	Resistive		True glass Projected Capacitive, Multitouch
CPU	ARM Cortex-A8 1 GHz		ARM Cortex-A9 quad-core 800 MHz
Operating system	Linux 3.12		Linux RT
Flash	4 GB		8 GB
RAM	512 MB		2 GB
Real Time Clock, RTC Back-up, Buzzer	Yes		

BTM Studio Suite

BTM Studio is a software suite that includes the following applications.

BTM-PC-IDE

It is an integrated development environment for easily designing and managing custom HMI thanks to a large embedded library of widgets. A unified design approach for native and web HMI projects that permits user to create pages optimized for display on the BTM panels, XAP 1.0, BTM-PC-RUNTIME and any web client (PC or smart devices). The design and management can be carried out in a single development environment so to reduce the application development and maintenance costs.

BTM-PC-CLIENT

BTM-PC-CLIENT is a standalone application that provides remote access to the BTM panels, XAP 1.0 and PC on which the BTM-PC-RUNTIME is operating. It is a lightweight Microsoft® Windows® application released for free in the BTM Studio suite. BTM-PC-CLIENT acts as remote client and communicates with the Runtime software. This way, users can view the HMI project on the BTM panel or BTM-PC-RUNTIME on the same network, even if they are installed in different installation locations.

BTM-PC-RUNTIME*

It is a powerful application that turns the Microsoft® Windows® computer into a HMI panel. This is the Windows® version of the HMI Runtime software that operates on the BTM panels. The BTM-PC-RUNTIME provides a set of HMI and data automation features of the BTM panels with a PC flexibility and expandability. BTM-PC-IDE permits user to design and manage the BTM-PC-RUNTIME projects.

**You need a BTM-PC-RUNTIME software license for any PC on which the Runtime operates.*

The BTM-PC-IDE software provides the following key-features for the areas presented below:

Design and UI experience

- It provides a widget gallery with a lot of symbols and vector objects and native support of SVG graphical objects and TrueType fonts.
- The data can be numbers, texts, bar graphs, analog indicators and graphical image formats for a high user interface experience.
- Users can change the properties of basic and advanced widgets. The widgets can be managed dynamically to control their visibility, transparency, position and other features.
- The HMI and web projects can be easily created and managed in multiple languages so to meet global requirements.

- A rich set of state-of-the-art HMI features permits to create a fully operational application for data acquisition and recording, presentation of trends, alarm management, schedulers, security and user management, e-mail.
- On-/Offline simulation to test HMI project on real time.
- Efficient scripting tool to create embedded functions.

Communication protocols

- A wide communication protocols permits user to meet all the different applications' requirements.
- Thanks to the gateway/routing capabilities, the communication among different communication protocols is possible.
- Easy integration into the UWP 3.0 ecosystem through plug'n play import of Modbus maps and EDE BACnet files.

Design and planning

- The same tool software for the development and management of the HMI / HMI web projects and data automation for BTM panels, XAP 1.0 and BTM-PC-RUNTIME.

Below the resources table for HMI projects:

Resource	BTM Panels	BTM-PC-RUNTIME
Data points	**10.000**	
Schedulers	**30**	
Alarms	**2.000**	10.000
Data transfer items (conversion between different protocols)	**1.000**	
Actions programmable per button state	**32**	
Trend buffers	**30**	
Tags per trend buffer	**200**	
Number of curves per trend widget	**5**	
Number of physical protocols	**4**	
Widget		
Basic widgets	**2000 per page**	
Recipes	**32**	
Parameter sets for a recipe	**1.000**	
Elements per Recipe	**1.000**	
Pages and pop-up		
Pages	**1000**	
Dialogue pages (pop-up)	**50**	

Resource	BTM Panels	BTM-PC-RUNTIME
Dialogue pages that can be opened at the same time	**5**	
Number of templates pages	**50**	
Number of languages	**24**	
User and Groups		
Number of user groups	**50**	
Number of users	**500**	
Number of concurrent remote clients	**4**	
JavaScript	**YES**	
Concurrent FTP sessions	**4**	
FTP additional folders	**5**	
PDF report generation	**YES**	

Configuration

Connect the BTM panel to the computer with an Ethernet connection and power it on. To access the settings page of the panel, enter the following parameters in a browser:

Parameters	Default value
Settings	https://ip_address/machine_config
Username	admin
Password	Gav@zzi!2015

By default the Ethernet ports are configured as follows:

Port	Default settings
ETH0 / WAN	DHCP
ETH2 / LAN*	DHCP
ETH2 / LAN*	IP Address 192.168.0.1 Subnet mask: 255.255.255.0

Note: only for BTM-T15-PLUS model.

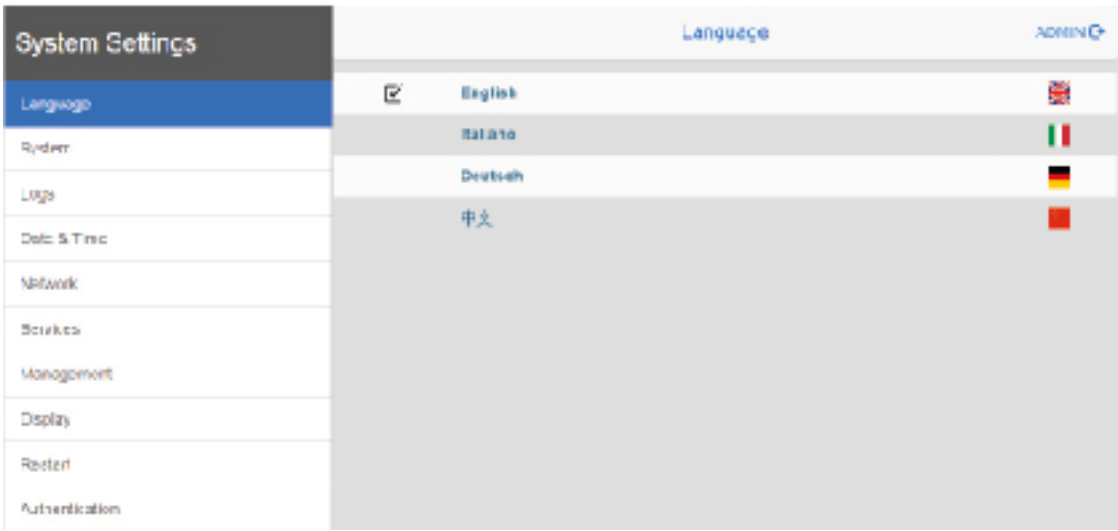

Connection Diagrams

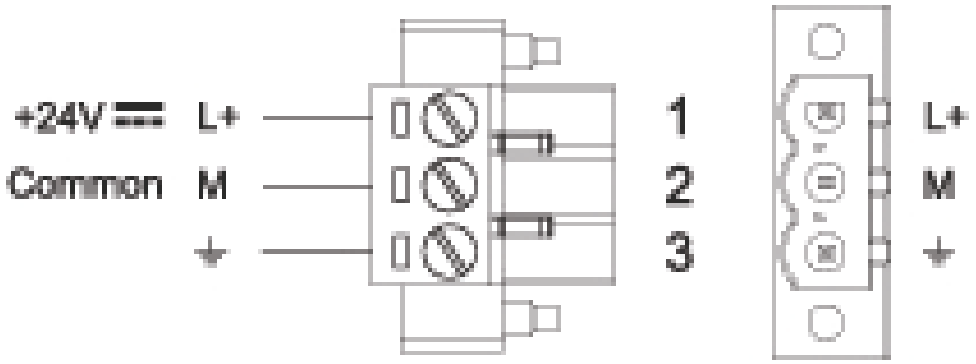

Fig. 5 *Power supply*

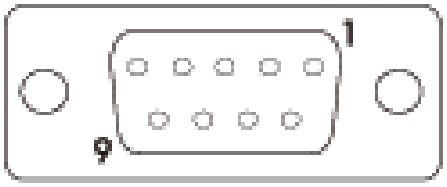

To operate in RS485 pins 4-3 and 8-7 must be connected externally.

Pin	RS485	RS422	RS232
1	GND		
2			
3	CHA-	CHA-	TX
4	CHB-	CHB-	RX
5			
6	+5V output		
7	CHB+	CHB+	CTS
8	CHA+	CHA+	RTS
9			

Fig. 6 *Serial port pinout BTM-Txx-RSE*

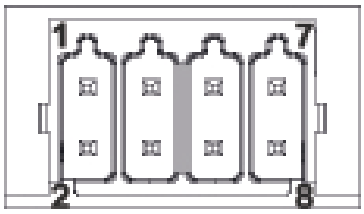

To operate in RS-485 pins 1-2 and 3-4 must be con - nected exte mally.

Pin	RS485	RS422	RS232
1	CHA-	CHB-	RX
2	CHB-	CHA-	TX
3	CHB+	CHB+	CTS
4	CHA+	CHA+	RTS
5	+5V output		
6	GND		
7			
8	SHIELD		

Fig. 7 *Serial port pinout BTM-T15-PLUS*

Connection diagram for RS485

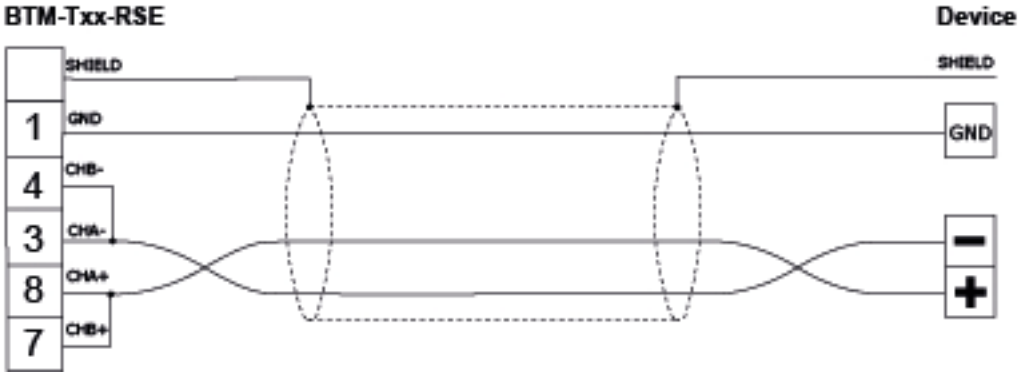

Fig. 8 *Connection diagram for RS485***

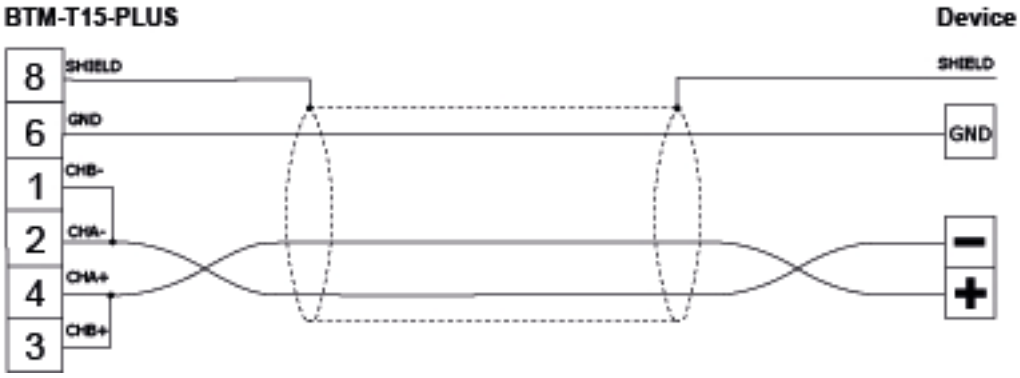

Fig. 9 *Connection diagram for RS485***

**The serial port is software programmable. Make sure you select the appropriate interface in the programming software.*
***It can be used as reference when the pinout of the PLC is not known.*

Note: different electrical standards are available for the signals in the PLC port connector: RS-232, RS-422, RS-485.

References

Further readings

Information	Document	Where to find it
BTM Studio manual	**User manual**	www.gavazziautomation.com/BTMStudioManual.pdf
Installation manual	**BTM-T7-RSE**	www.gavazziautomation.com/MANBTM-Txx-RSE.pdf
	BTM-T10-RSE	
	BTM-T15-PLUS	

Order code

Component name/code	Description
BTM-T7-RSE	**HMI 7” colour display with resistive touchscreen, 1 Ethernet, 1 Serial, 1 USB**
BTM-T10-RSE	**HMI 10.1” colour display with resistive touchscreen, 1 Ethernet, 1 Serial, 1 USB**
BTM-T15-PLUS	**HMI 15.6” colour display with capacitive touchscreen, 3 Ethernet, 1 Serial, 2 USB**

Accessories

Component name/code	Description
BTM-T7-BOX1	**Wall mounting box for BTM-T7-RSE**
BTM-T10-BOX1	**Wall mounting box for BTM-T10-RSE**
BTM-KNX	**Plug-in KNX module for BTM-T15-PLUS and for the XAP10RSEXX controller**

Software

Component name/code	Description
BTM-PC-IDE-LICENCE	**BTM-PC-IDE licence code**
BTM-PC-RT-LICENCE	**BTM-PC-RUNTIME licence code**
BTM-PC-CLIENT	**Microsoft® Windows® freeware client application**

CARLO GAVAZZI compatible components

Scope	Component name/code	Notes
Monitor and control	UWP30RSEXXX	See relevant data sheet

COPYRIGHT ©2022

Content subject to change. Download the PDF: www.productselection.net