Mechanical Cam Switches

BNS 819-B04-E10-46-12
Order Code: BNS04K2

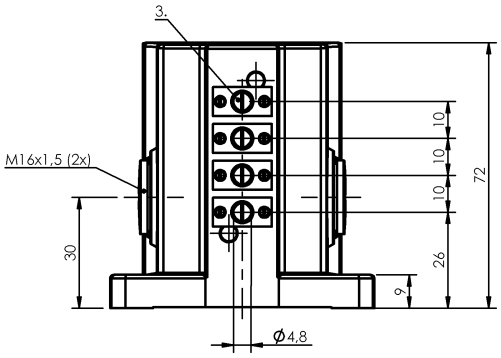

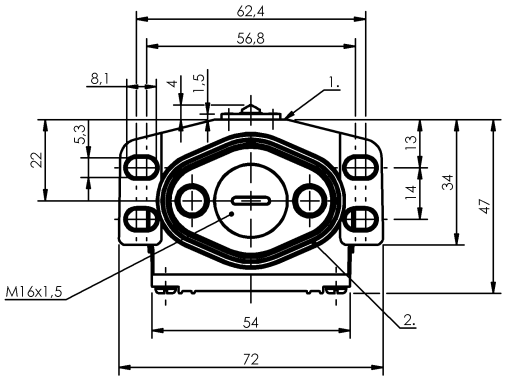

1) Reference edge, 2) Sealing ring, 3) Anti-crystallization plunger

Display/Operation

Function indicator	1-4. Switch position: None

Electrical connection

Connection type	1-4. Switch position: Solder connection

Electrical data

Continuous current	1-4. Switch position: 0.1 A
Rated operating voltage Ue	1-4. Switch position: 250 V AC
Switching function mechanical	Single-pin changeover
Switching rate	1-4. Switch position: 200/min

Environmental conditions

Ambient temperature	-5...85 °C
IP rating	IP67

Functional safety

B10d (EN ISO 13849-1)	BSE 73.1: 10 mil. Switching operations

General data

Approval/Conformity	CE CSA WEEE
Basic standard	IEC 60947-5-1
Operating principle	1-4. Switch position: Mechanical
Version	Snap contact

Material

Housing material	Aluminum
Housing material, surface protection	Anodized
Material contacts	1-4. Switch position: Gold
Plunger material	1-4. Switch position: Stainless steel (1.4034)

Mechanical data

Approach direction	longitudinal, parallel to attachment surface
Approach speed	1-4. Switch position: 10 m/min
Distance cam - reference edge	1-4. Switch position: 2.30...2.80 mm
Flange, feed-through	1 threaded exit M16
Installation	Vertical
Life expectancy mechanical	1-4. Switch position: 10 million Switching operations
Number of switching positions	4x E-Chisel
Plunger style	1-4th switch position: E-chisel
Switch actuation force	1-4. Switch position: 8 N
Switching element	1-4. Switch position: BSE 73.1

Range/Distance

Reproducibility	1-4. Switch position: ±0.02 mm
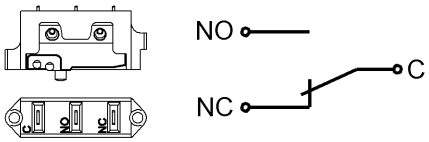
Wiring Diagrams